Bliley CRYSTAL OVENS

TCO SERIES

Designed specifically for use with Bliley types BH6A and SR11 crystal units. Standard models are supplied as indicated:

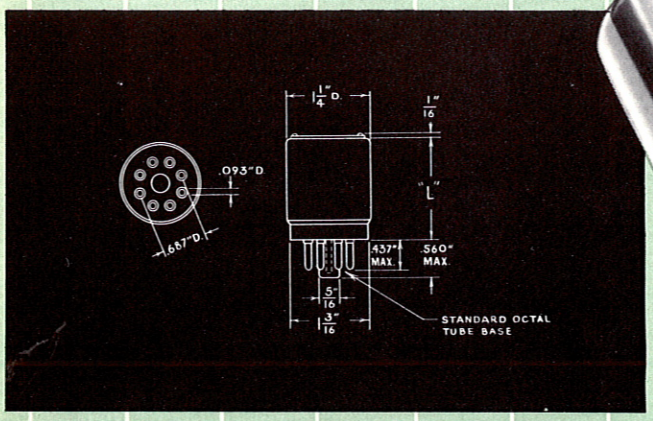

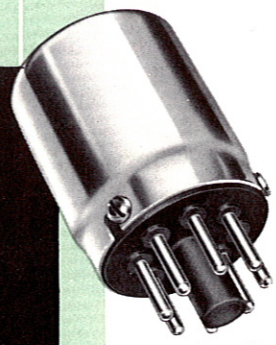

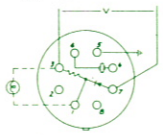

Model	Heater Voltage	Watts	Crystal Sockets	Control Temperature
TCO-1A	6.3	5.5	1	75°C or 85°C
TCO-1C	24 or 26.5	7.75	1	75°C or 85°C
TCO-2	6.3	5.5	2	75°C
TCO-2	6.3	7.9	2	85°C
TCO-2D	24 or 26.5	7.75	2	75°C or 85°C

TYPES TC911-TC92-TC93

Designed specifically for use with Bliley Crystal units. Standard models are supplied, for crystal types, as indicated:

Crystal Group A Types FM6, BH81A, MC7, AR4, AR5

Crystal Group B Types BH8, MC75, MS46A

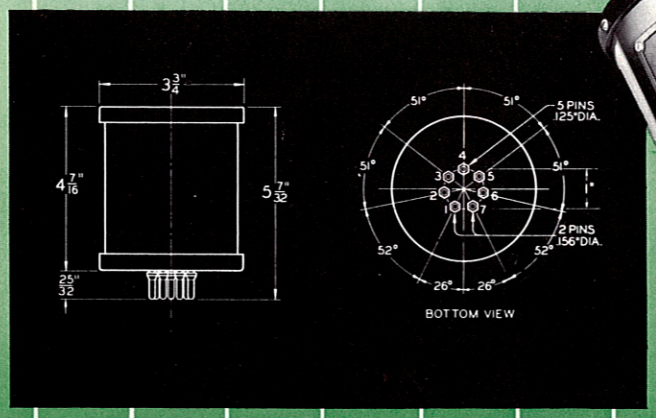

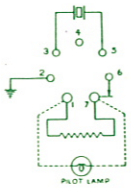

Model	Heater Voltage	Watts	Crystal Group	Control Temperature
TC911	115	10	B	70°C
TC92	6.3	10	A	60°C
TC93	18	10	A	60°C

TYPE TC97

Exceptional temperature stability is provided by two separate heaters, individually regulated by separate thermostats. Ambient temperature variations are first minimized by outer stage (booster) heater with final regulation by inner stage (control) heater.

Crystal Group A Types FM6, BH81A, MC7, AR4, AR5

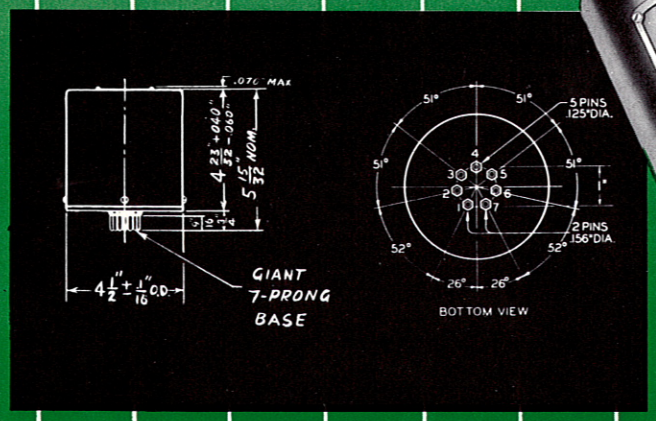

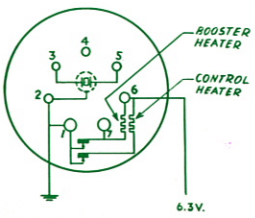

Model	Heater Voltage	Watts	Crystal Group	Control Temperature
TC97	6.3	11	A	75°C